CEL-24F375-005

DC-50 GHz

2.4mm Female End Launch Connector

PRODUCT SPECIFICATIONS

KEY FEATURES

Polarity	Standard
Interface	End Launch
Connector Gender	Female
Impedance	50 Ω
Body Style	Straight

PERFORMANCE FEATURES

Frequency Range	DC-50 GHz
VSWR	1.4:1 typ.
Insertion Loss	< 0.5 dB typ.
Connector Rating	500 Cycles
Operating Temperature	-55° to +100° C

CONNECTOR FEATURES

Body Width	0.375”/9.5mm Square Flange
Pin Diameter	0.005”/0.13mm
Attachment Method	Solder

MATERIAL FEATURES

Body Material	Passivated Stainless Steel
Body Plating	Passivated Stainless Steel
Center Contact	BeCu C17300 Gold Plated
Insulator	PEI

OUTLINE DRAWING

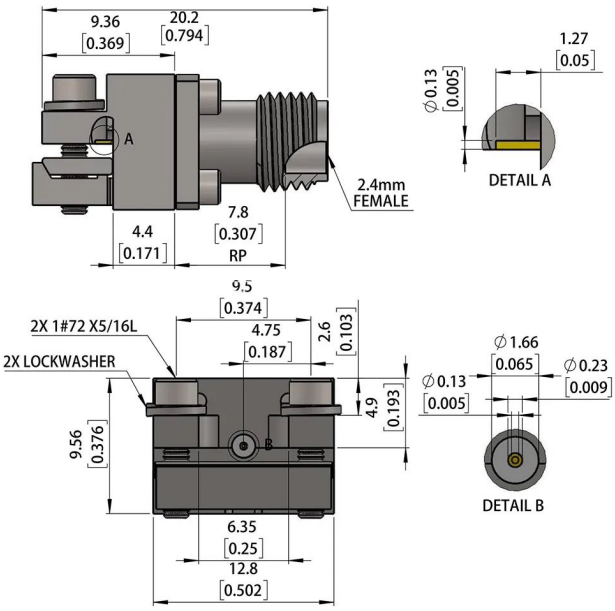

Scan here for Vista-RF.com

Vista RF, Inc.
Rocklin, CA 95677
sales@vista-rf.com
www.vista-rf.com